DIMENSIONS & WEIGHTS

H2, D1, D2 and Pump Weight are for reference only. Pump Weight is based on Pump End with Totally Enclosed Fan Cooled Motor.

MODEL	HP	NEMA FRAME SIZE	H1 [in]	H2 [in]	D1 [in]	D1 [in]	PUMP END [lbs]	PUMP [lbs]
NSVM(N) 125B1/1-618	25	284TSC	32.95	54.76	14.17	10.98	214	576
NSVM(N) 125B1-622	30	286TSC	32.95	56.26	14.17	10.98	215	607
NSVM(N) 125B2/2-630	40	324TSC	39.07	63.44	15.83	12.48	236	783
NSVM(N) 125B2/1-637	50	326TSC	39.07	64.94	15.83	12.48	253	837
NSVM(N) 125B2-645	60	364/5TSC	39.07	67.60	17.91	16.38	253	1078
NSVM(N) 125B3/2-655	75	364/5TSC	45.67	74.20	17.91	16.38	330	1177
NSVM(N) 125B3/1-655	75	364/5TSC	45.67	74.20	17.91	16.38	330	1177
NSVM(N) 125B3-675	100	404/5TSC	45.67	78.15	19.13	16.38	330	1375
NSVM(N) 125B4/2-675	100	404/5TSC	51.77	84.25	19.13	16.38	349	1394
NSVM(N) 125B4/1-675	100	404/5TSC	51.79	84.27	19.13	16.38	349	1394

ASSEMBLY DRAWINGS

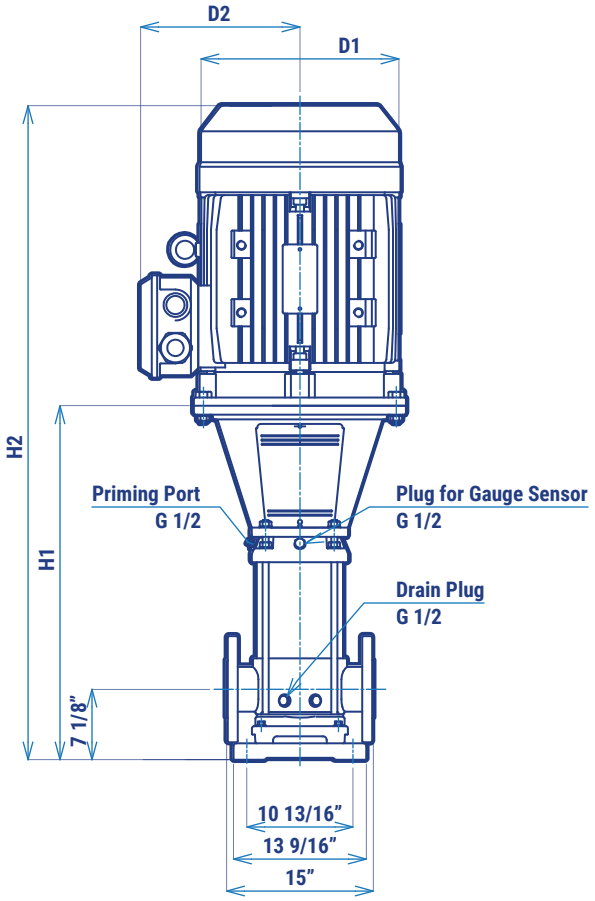

FLANGE (ANSI)

5" 300lb R.F. STAGES 4/1~4/2

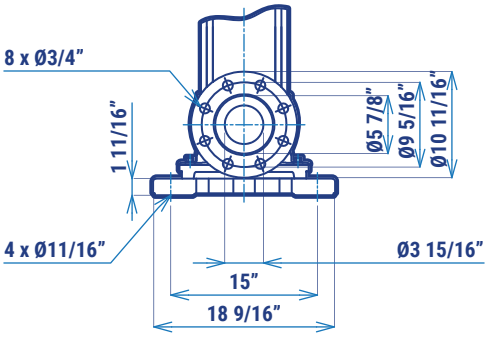
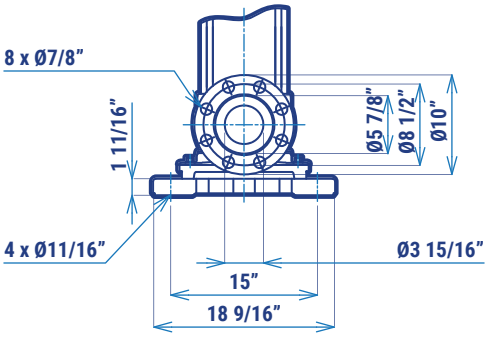
5" 150lb R.F. STAGES 1/1~3