TERAL	SECTIONAL DRAWING	No:SE-50APL-6.75S Date: 2013-10

MODEL: 50APL-6.75S

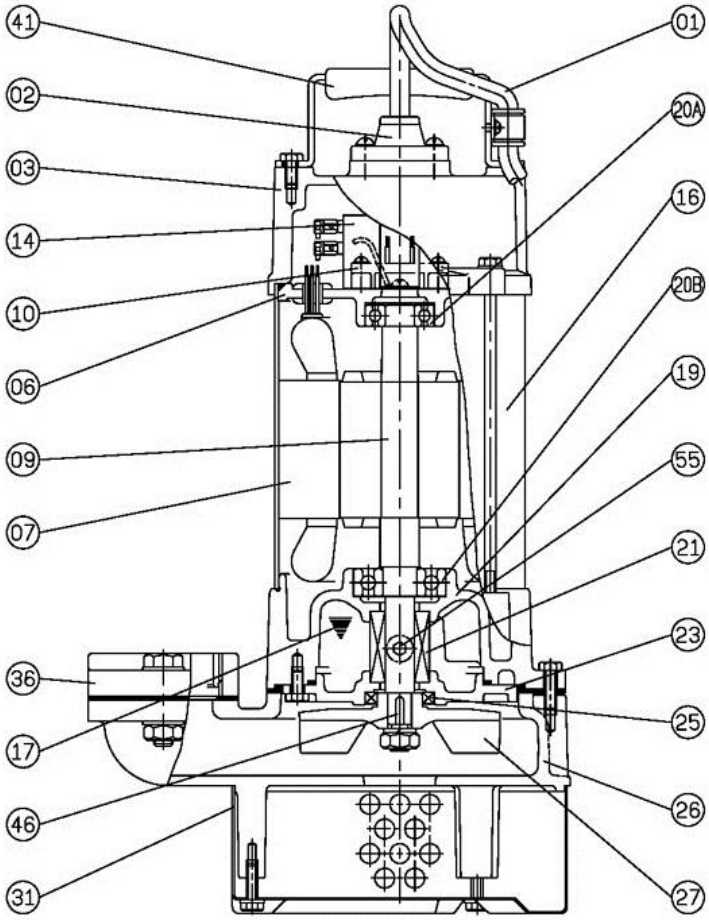

No.	Part name	Material	QTY	Remark
01	Cable		1	VCT/ H07RN-F UL / CSA
02	Cable base	PC+PBT	1	
03	Upper cover	FC-200	1	
06	Bracket	FC-200	1	
07	Stator		1	
09	Shaft(with Rotor)	SUS410	1	
10	Auto-cut		1	
14	Capacitor		1	
16	Motor frame	SUS304	1	
17	Lubricant	Turbine oil #32	1	
19	Bearing bracket	FC-200	1	
20A	Upper bearing		1	
20B	Lower bearing		1	
21	M. seal	CA VS CE SIC VS SIC	1	

No.	Part name	Material	QTY	Remark
23	M. seal bracket	FC-200	1	
25	Oil seal	NBR	1	
26	Casing	FC-200	1	
27	Impeller	FC-200	1	
31	Strainer	SUS304	1	
41	Handle	SUS304	1	
46	Impeller key	SUS304	1	
47	Packing (1 set)		1	
55	Oil plug	SUS304	1	