DIMENSIONAL DRAWING
MONOSTAGE CENTRIFUGAL PUMP
TRAVAINI PUMP MODEL

SERIES TCH 125

BARESHAFT CONSTRUCTION

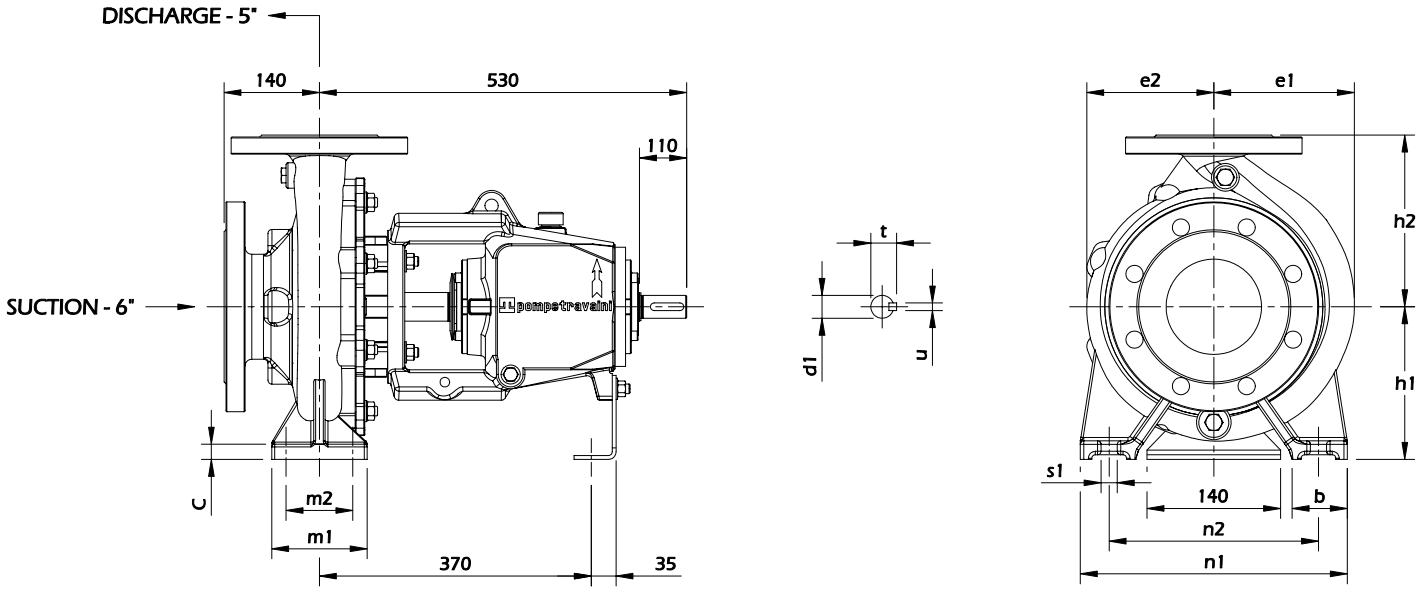

MODEL	h1	h2	b	c	m1	m2	n1	n2	s1	e1	e2	WEIGHT (Kg)
TCH 125-250	250	355	80	20	160	120	400	315	18	245	200	147
TCH 125-315	280		100	22	200	150	500	400	22	270	230	183

Dimensions in mm

Premier Fluid Systems
Canadian Home of Travaini Pumps
4460 Harvester Road • Burlington • Ontario • L7L 4X2 • Website: www.pfspumps.com
Tel: 1-800-461-2611 or 905-637-2611 • Fax: 905-333-4722 • e-mail: info@pfspumps.com

DATE : DECEMBER 2006

No.: 15.129